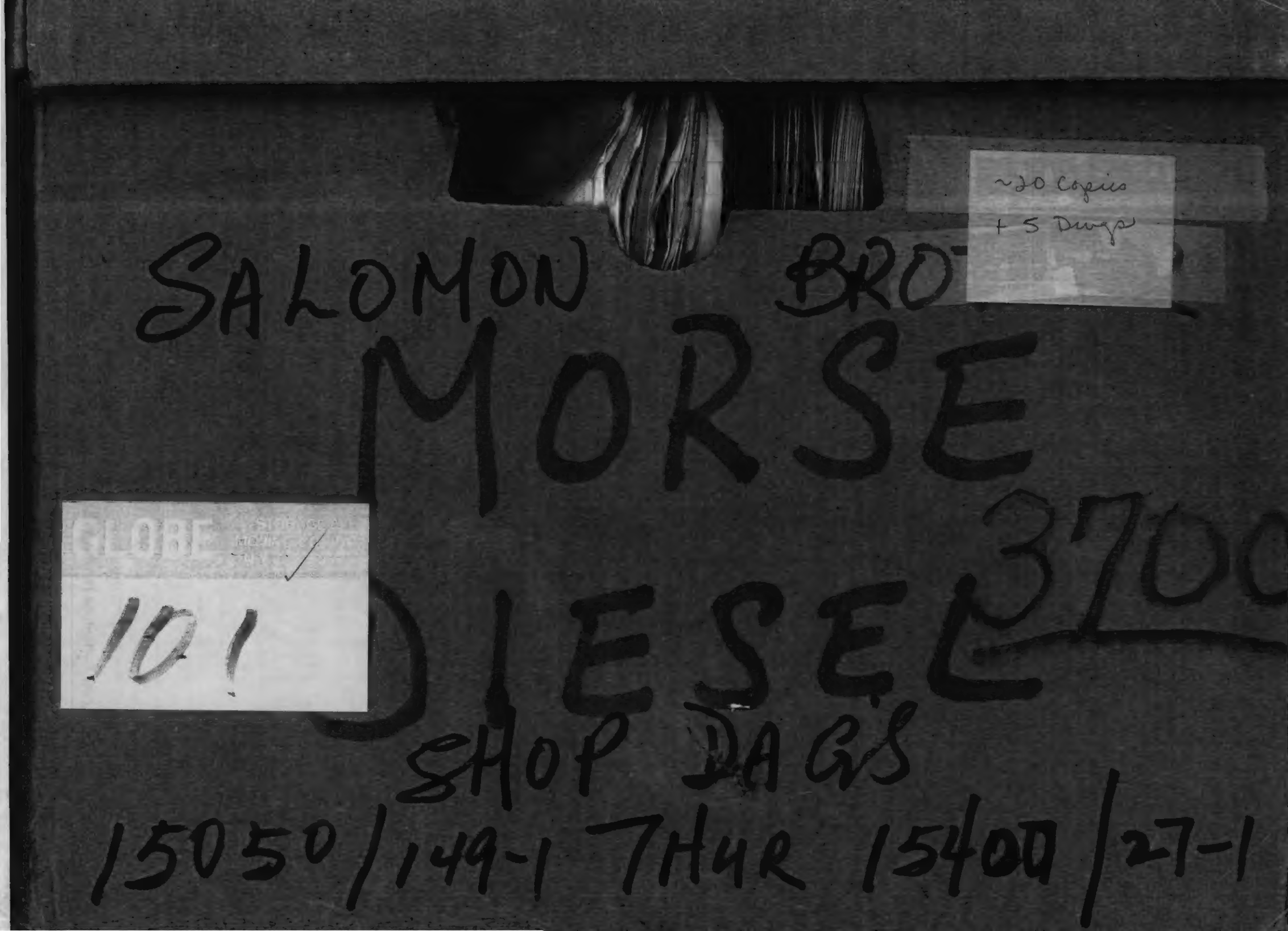
~20 Copies
+ 5 Dwgs
SALOMON BRO
MORSE
DIESEL
3700
GLOBE
101
SHOP DAGS
15050/149-1 7HUR 15400/27-1

File-153

WTCI-28-SOM

153-1

SUBMITTAL MATERIAL

SALOMON BROTHERS INC.
7 WORLD TRADE HEADQUARTERS

OUR ORDER NO. 600376

CUST: CENTRIFUGAL ASSOCIATES

RECEIVED
MAR [illegible] 1990
MORSE DIESEL

REC'D-SOM-NY
MAR 28 1990

PREFERRED UTILITIES MANUFACTURING CORP.

11 South Street, Danbury, Connecticut 06810
Telephone: (203) 743-6741 FAX: (203) 798-7313

Boston New York Philadelphia

SUBMITTAL MATERIAL
SALOMON BROTHERS INC.
7 WORLD TRADE HEADQUARTERS
NEW YORK

I-2659
2/23/90
PG. 1 OF 1

DRAWINGS:

A.	PH-2472	Fuel Oil Pump Set - Bill of Material
B.	PH-2472-1	Fuel Oil Pump Set - Fabrication Details
C.	W-2374	Pump Set Control Cabinet - Bill of Material
D.	W-2374-1	Pump Set Control Cabinet - Factory and Field Wiring
E.	L-2882	Pump Set Control Cabinet - Layout

BULLETINS:

1.	Sect. 144 Pgs.3,4,8 & 25	Viking #AL-4195 Fuel Oil Pump (70 GPM #2 Oil @ 50 PSI)
2.	19.21	Preferred 2" Dial Compound (30"-0-60 #) and Pressure (0-100 #) Gauges
3.	19.20	Preferred No. 50 Duplex Strainer (3" Flgd.)
4.	19.25	Preferred Type "R" Relief Valve (3")
5.	Cat. E Pg. 18	F.E. Anderson Model V4-2-U Flotect Vane Operated Flow Switch

RESUBMIT

RECEIVED
MAR - 5 1990
FLACK & KURTZ
CONSULTING ENGINEERS
N.Y., N.Y.

FLACK AND KURTZ
CONSULTING ENGINEERS
475 5th AVENUE, N.Y., N.Y. 10017

REFER TO CONTRACT DOCUMENTS FOR DEFINITION OF ACTION	A ACTION	
	B ACTION	X
	C ACTION	

By A.B. Date 3/23/90
Tech Coord. Date
S O M NUMBERS

SECTION	FILE NO.	SUBMISSION

SUBMITTED FOR APPROVAL
CENTRIFUGAL ASSOCIATES, INC.
MECHANICAL CONTRACTING DIVISION
150 EAST 42nd STREET
NEW YORK, NEW YORK 10017
DATE 2/28 1990

REC'D-SOM-NY
MAR 28 1990

RECEIVED
MAR 29 1990
MORSE DIESEL

BILL OF MATERIAL

A

ITEM	QTY.	DESCRIPTION	MFG. & PART NO.
1	2	FUEL OIL PUMP- 70 G.P.M. #2 OIL @ 50 P.S.I.	VIKING #AL-4195
2	2	MOTOR-3 H.P-1140 R.P.M.-460V-3-60 -FR#213T	
3	1	DUPLEX STRAINER - 3" FLANGED	PREFERRED #50
4	2	RELIEF VALVE - 3" N.P.T. - SET @ 60 P.S.I.	P.U. TYPE "R"
5	2	CHECK VALVE - 3" N.P.T. #B319	STOCKHAM
6	1	2" DIAL COMPOUND GAUGE - RG:30"hg-0-60 PSI	P.U. #13150
7	1	2" DIAL PRESSURE GAUGE - RG:0-100 PSI	P.U. #13153
8	1	FLOW SWITCH - FOR 3" PIPE - #V4-2-U	W.E. ANDERSON
9-12	4	GATE VALVE - 3" N.P.T. #B103	STOCKHAM
13-14	2	GAUGE SHUTOFF VALVE - 1/4" N.P.T.	P.U. #11399
15	1	3" X 7 1/2" 125#-C.I.-F.F. THREADED FLANGE	
16	1	FULL FACE GASKETS FOR 3" X 7 1/2" 125# - C.I. FLANGE	
17	4	5/8"-11 X 2 1/2" LONG HEX HEAD CAP SCREW	PREFERRED
18	4	5/8"-11 HEX NUTS	PREFERRED

(1) PROVIDE 5MHP IN LIEU OF 7½ MHP AS SCHEDULED REVISE ELECTRICAL TO ACCOMODATE 5MHP.

(2) PROVIDE INFORMATION ON MOTORS SERVICE FACTOR.

JOB: SALOMON BROTHERS INC.
7 WORLD TRADE HEADQUARTERS

CUST.: CENTRIFUGAL ASSOCIATES

REF. DWGS. PH-2472-1, -2, -3 & W-2374

PREFERRED UTILITIES MANUFACTURING CORP.
11 South Street Danbury Conn.

FUEL OIL PUMP SET
BILL OF MATERIAL

SHEET 1 OF 1

DR: CL 2-27-90

APPR'D: R

PH-2472

LET.	REVISIONS	DATE OF CHG.

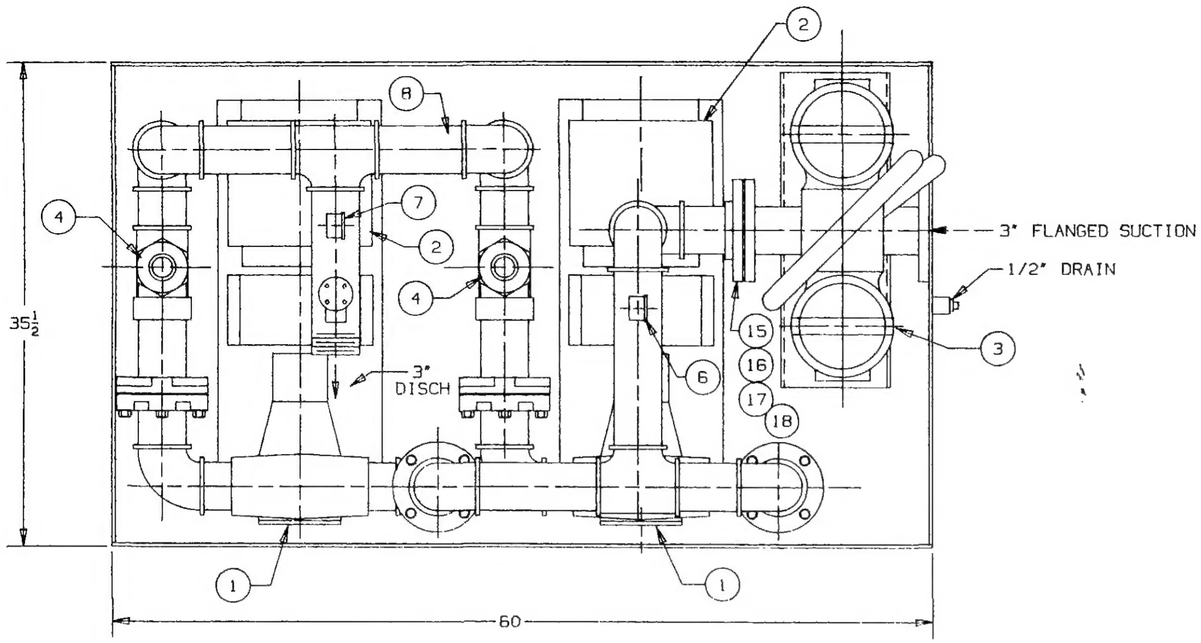

ITEM	QTY	DESCRIPTION
1	2	FUEL OIL PUMP - 70 GPM #2 OIL @ 50 PSI
2	2	MOTOR - ~~3XHP~~ 5MHP. 1140 RPM - 460V-3-60 FR #213T
3	1	DUPLEX SUCTION STRAINER - 3" FLANGED
4	2	RELIEF VALVE - 3" NPT SET @ 60 PSI
5	2	CHECK VALVE - 3" NPT
6	1	2" DIAL COMPOUND GAUGE - RANGE: 30"hg-0-60PSI
7	1	2" DIAL PRESSURE GAUGE - RANGE: 0-100 PSI
8	1	FLOW SWITCH - 1-1/2" CONN.
9-12	4	GATE VALVE - 3" NPT
13-14	2	GAUGE SHUTOFF VALVE - 1/4" NPT
15	1	3" X 7-1/2" 125# C.I. F.F. THREADED FLANGE
16	1	FULL FACE GASKET FOR 3" X 7-1/2" 125# C.I. FLANGE
17	4	5/8"-11 X 2-1/2" LONG HEX HEAD CAP SCREWS
18	4	5/8"-11 HEAVY HEX NUTS

NOTES:

1. LOCATIONS OF COMPONENTS MAY BE MODIFIED TO SUIT EQUIPMENT DIMENSIONS OR ARRANGEMENT
2. ALL PIPE: SCH. 40 ALL FITTINGS: 150# M.I.
3. PIPE ALL RELIEF VALVES (2) INTO A COMMON LINE AND RETURN TO TANK (IN FIELD BY CONTR.)
4. FOR COMPLETE ITEM DESCRIPTIONS REFER TO DWG. PH-2472
5. ALL PIPE NOT SIZED - 3" NPT

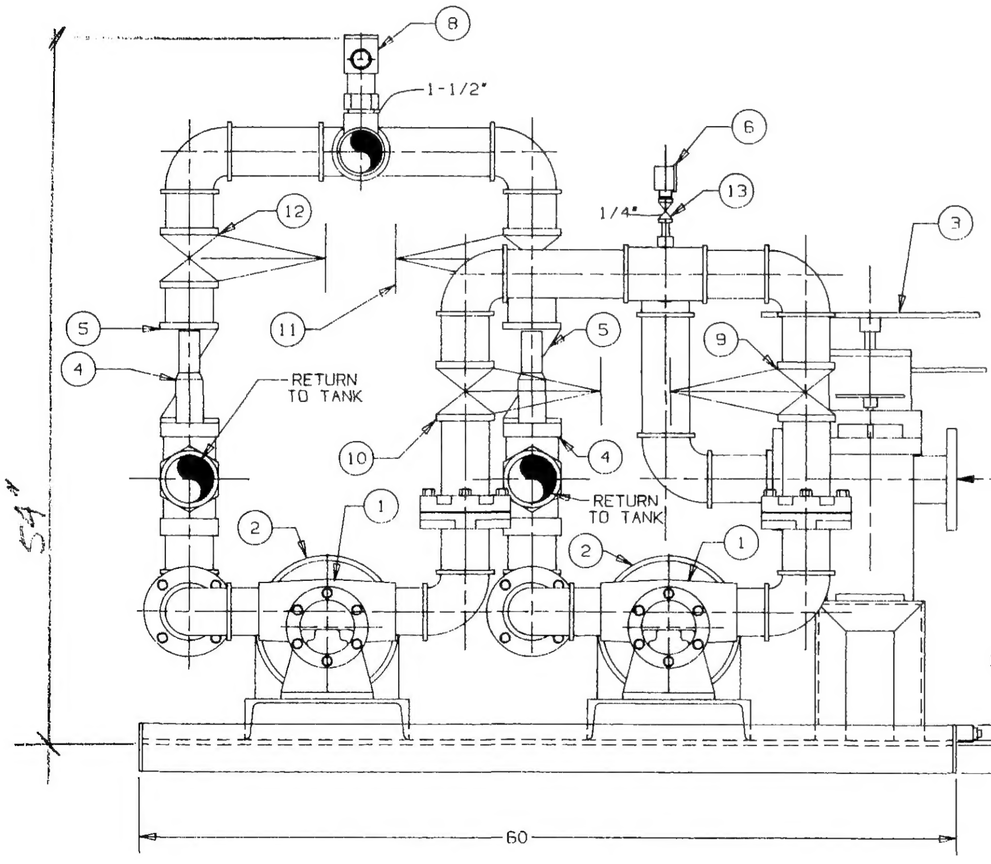

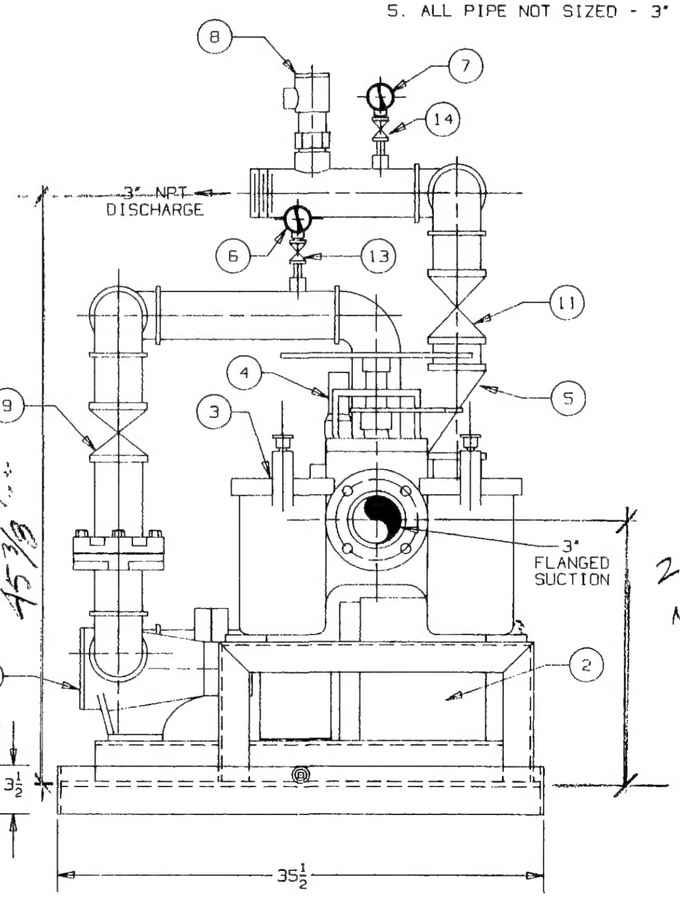

21½" INCHES MAXIMUM.

JOB: SALOMON BROTHERS
7 WORLD TRADE HEADQUARTERS

CUST: CENTRIFUGAL ASSOCIATES

PREFERRED UTILITIES MANUFACTURING CORP.

11 SOUTH STREET — DANBURY, CONNECTICUT

FUEL OIL PUMP SET LAYOUT

REF. DWGS: PH-2472, PH-2472-1,-2,-3, & W-2374

LET.	REVISIONS	DATE OF CHANGE

MODEL: DUPLEX	SIZE: 70 GPM	TYPE: #2 OIL
SUPERSEDES:		ASS'Y NO.:
MATERIAL:		SCALE: 1-1/2"=1'-0"
DRAWN: S. MOLA 2/24/90		
APPR'D: RE 2-27-90		PH-2472-1

FILE #PH24721

BILL OF MATERIAL

C

ITEM	QTY.	DESCRIPTION	MFG. & PART NO.
CAB	1	CABINET - 30"W X 21"H X 8"D - NEMA 1	P.U. #AC9001
		(WALL MOUNTED)	
TB	1	TERMINAL BLOCK - 480V	P.U. #12053
CB1	1	PUMP NO. 1 MOTOR C.B. - 15 AMP.	WEST. #EHD-3015
CB2	1	PUMP NO. 2 MOTOR C.B. - 15 AMP.	WEST. #EHD-3015
MS1	1	PUMP NO. 1 MOTOR STARTER	WEST.#A200-MOCAC
		OVERLOAD (4.5 AMP)	WEST.#FH-33
MS2	1	PUMP NO. 2 MOTOR STARTER	WEST.#A200-MOCAC
		OVERLOAD (4.5 AMP)	WEST.#FH-33
LT1	1	LEAD PUMP FAIL LIGHT (RED)	P.U. #107110R
LPSS	1	LEAD PUMP SELECTOR SWITCH	P.U. #16001
SW1.2	2	PUMP HAND-OFF-AUTO SWITCH	P.U. #16000
RPB	1	RESET PUSHBUTTON - LEAD PUMP FAIL - N.C.	P.U. #16598
ASPB	1	ALARM SILENCING PUSHBUTTON - N.O.	P.U. #16599
CPF	1	CONTROL POWER FUSE - 6 AMP.	P.U. #16232-6
XMF	2	CONTROL TRANSF. FUSE - 1 AMP.	P.U. #16234-1
XMFR	1	CONTROL TRANSFORMER - .500KVA-460V/120V	P.U. #16252
TDR	1	TIME DELAY RELAY - LEAD PUMP FAIL -	P.U. #15511
		SET @ 10 SEC.	
R1	1	RELAY - LEAD PUMP FAIL - TPDT	P.I. #20223A
R2	1	RELAY - ALARM SILENCING - SPDT	P.I. #20222A
	1	RELAY BASE - TPDT - R1	P.I. #20248
TS	12	TERMINAL STRIP -	P.U. #12100
		NAMEPLATE: A ( ) B ( ) C ( )	P.I. #57832
LOGO	1	NAMEPLATE: LOGO	P.U. #8686
AB	1	ALARM BELL - 4 1/4" DIA.	P.U. #11714
	2	RELAY BASE - SPDT - R2 & TDR	P.I. #20249

JOB: SALOMON BROTHERS, INC.
7 WORLD TRADE HEADQUARTERS

CUST.: CENTRIFUGAL ASSOCIATES

REF. DWGS. W-2374-1, L-2882 & PH-2472

PREFERRED UTILITIES MANUFACTURING CORP.

11 South Street Danbury Conn.

PUMP SET CONTROL CABINET
BILL OF MATERIAL

SHEET 1 OF 1

DR: CL 2-23-90

W-2374

LET.	REVISIONS	DATE OF CHG.	APPR'D:

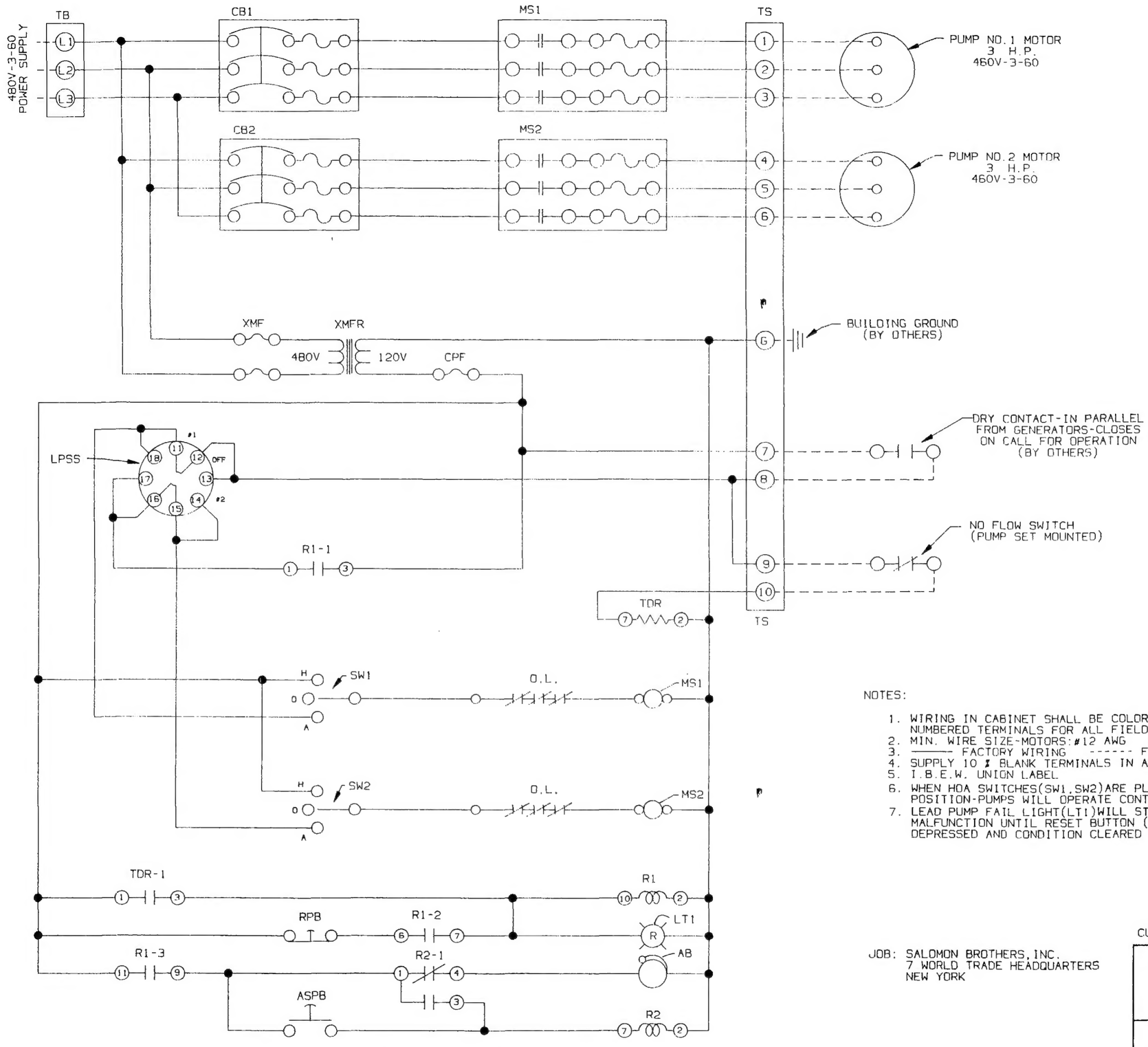

NOTES:

1. WIRING IN CABINET SHALL BE COLOR CODED AND TERMINATED AT NUMBERED TERMINALS FOR ALL FIELD CONNECTIONS
2. MIN. WIRE SIZE-MOTORS:#12 AWG CONTROL CIRCUIT:#14 AWG
3. ——— FACTORY WIRING ------ FIELD WIRING
4. SUPPLY 10 # BLANK TERMINALS IN ADDITION
5. I.B.E.W. UNION LABEL
6. WHEN HOA SWITCHES(SW1,SW2)ARE PLACED IN THE HAND POSITION-PUMPS WILL OPERATE CONTINUOUSLY
7. LEAD PUMP FAIL LIGHT(LT1)WILL STAY ILLUMINATED UPON MALFUNCTION UNTIL RESET BUTTON (RPB)IS DEPRESSED AND CONDITION CLEARED

CUST.: CENTRIFUGAL ASSOCIATES

JOB: SALOMON BROTHERS, INC.
7 WORLD TRADE HEADQUARTERS
NEW YORK

PREFERRED UTILITIES MANUFACTURING CORP.

11 SOUTH STREET — DANBURY, CONNECTICUT

PUMP SET CONTROL CABINET
FACTORY AND FIELD WIRING

REF.DWGS. W-2374,L-2882 & PH-2472

MODEL:	SIZE:	TYPE:
SUPERSEDES:		ASS'Y NO.:
MATERIAL:		SCALE: NONE
DRAWN: RE 2-23-90		W-2374-1
APPR'D:		

LET.	REVISIONS	DATE OF CHANGE

FILE #W23741

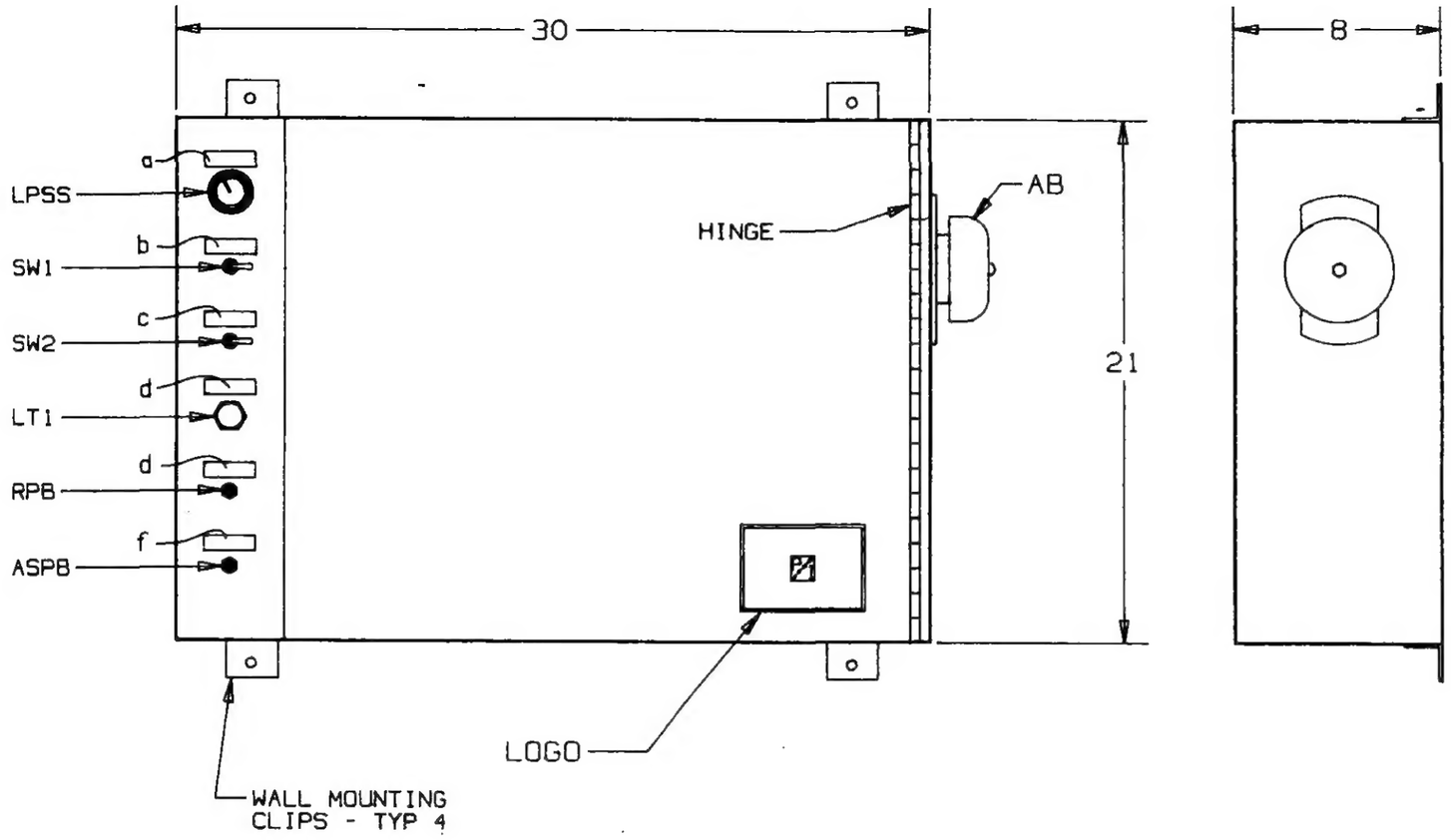

NOTES:

CABINET:

30"w X 21"h x 8"d
NEMA 1 - AC-9001
FULLY GASKETED
WALL MOUNTED
PAINTED TEXTURED GREY
ENAMEL THROUGHOUT
NAMEPLATES: BLACK
PHENOLIC W/ WHITE LETTERS

NAMEPLATE LEGEND (SIZE "B" MIN.)

a. LEAD PUMP SELECTOR
AUTO-No.1-No. 2
b. PUMP No.1
HAND-OFF-AUTO
c. PUMP No.2
HAND-OFF-AUTO
d. LEAD PUMP FAIL
e. LEAD PUMP FAIL ALARM RESET
f. ALARM SILENCE

JOB: SALOMON BROTHERS
7 WORLD TRADE HEADQUARTERS

CUST: CENTRIFUGAL ASSOCIATES

REF. DWGS: W-2374 & W-2374-1 & PH-2472

LET.	REVISIONS	DATE OF CHANGE

FILE #L2882

PREFERRED UTILITIES MANUFACTURING CORP.

11 SOUTH STREET — DANBURY, CONNECTICUT

PUMP SET CONTROL CABINET LAYOUT

MODEL: DUPLEX	SIZE: 70 GPM	TYPE:
SUPERSEDES:	ASS'Y NO.:	
MATERIAL:	SCALE: 2" = 1'-0"	
DRAWN: S. MOLA 2-24-90	L-2882	
APPR'D: RE		

VIKING® HEAVY-DUTY PUMPS
SERIES 4195
STANDARD CONSTRUCTION

FEATURES

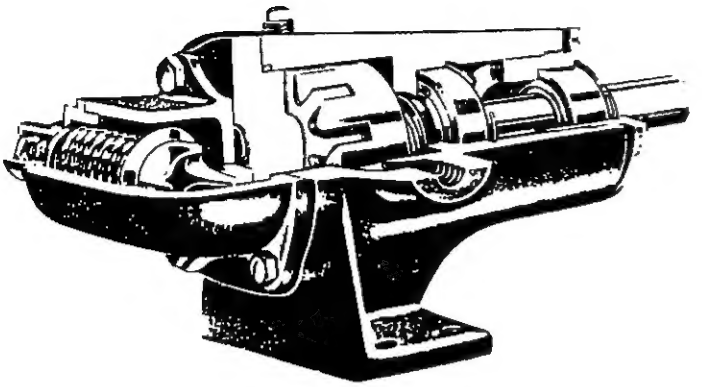

SERIES 4195 Pumps
Cutaway View
10-20-30 GPM Sizes

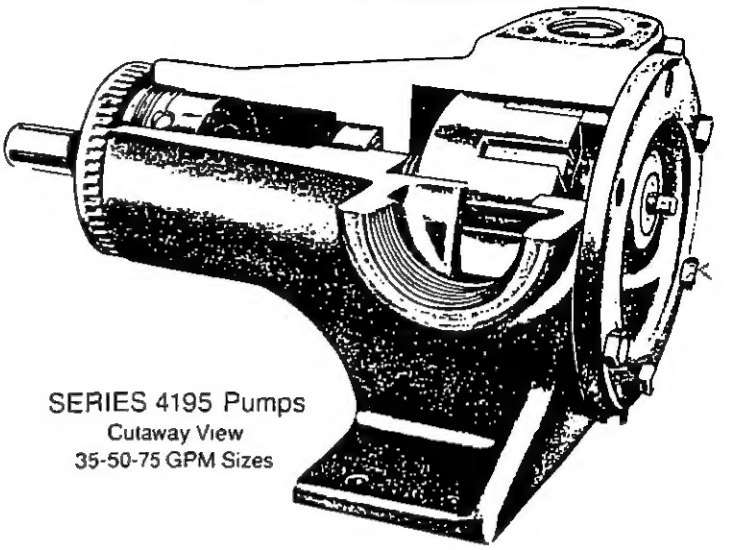

SERIES 4195 Pumps
Cutaway View
35-50-75 GPM Sizes

①Pressure Range	250 PSI for 100 SSU and above 150 PSI for 38 to 100 SSU 100 PSI for below 38 SSU
①Temperature Range	−40° F. to +350° F.
①Viscosity Range	0.1 cP to 15,000 SSU

BALL BEARINGS
(Standard Equipment)
Pumps are equipped with inner & casing ball bearing installed out side of mechanical seal and a radial thrust ball bearing permitting heavy-duty service up to 250 PSI.

DUCTILE IRON PARTS
(Standard Equipment)
("AS", "AK", "AL" Sizes)
Internal pumping gears (rotor and idler) are constructed of ductile iron for added strength in handling all types of liquids up to 15,000 SSU. "HL" size rotor also furnished in ductile iron.

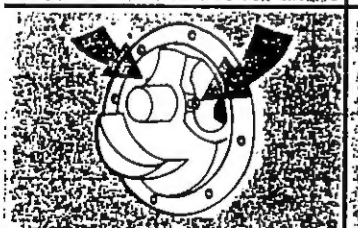

PRESSURE LUBRICATION
(Standard Equipment)
("AS", "AK", "AL" Sizes)
A patented pressure lubrication system automatically lubricates the idler bushing. This system provides a constant film of liquid between the idler bushing and idler pin at a pressure equal to the pump discharge pressure regardless of pump rotation.

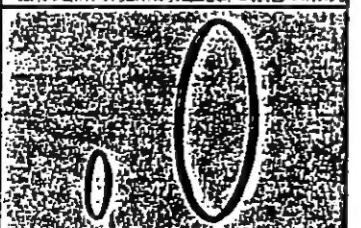

O-RING GASKETS
(Standard Equipment)
O-Ring gaskets are used between casing and head plate and between casing and relief valve or valve plates. Flat asbestos valve gaskets furnished on "GG", "HJ" and "HL" size pumps. These gaskets provide a positive seal eliminating a chance for leakage at these points.

GPM 10-20-30-35-50-75
②(Nominal Rating)

Viking's high-speed, heavy-duty Series 4195 pumps are available in capacities of 10, 20, 30, 35, 50 and 75 GPM. The three smaller size pumps can be furnished directly connected to either 1800 or 1200 RPM motors. The three larger sizes directly connected to 1200 RPM motors. (See Series 4195D units shown on page 144.5.) All six sizes of Viking Series 4195 pumps are furnished with Roto-Ring mechanical seals. This seal is a simple self-adjusting, non-leak method of shaft sealing located ahead of the casing ball bearing. The Series 4195 pumps are built for continuous or intermittent duty for such applications as filtering, circulating, transferring, or booster service in general industrial, petroleum and marine uses. NOTE: "UL" listed pumps for handling flammable liquids require special construction. (Ductile Iron Casing on "AS", "AK" and "AL" sizes). See Catalog Section 440 for details and pricing information. Model numbers for these pumps must be designated by a suffix -F, eg. GG4195-F or when used with a "D" drive, GG4195D-F. "UL" listed models **must** be equipped with either an internal or return-to-tank safety relief valve. Maximum discharge pressure for "UL" listed models is 125 PSIG.

①Values shown represent minimums or maximums. Some special construction or consideration may be required before a catalogued pump can be applied to an application involving maximum pressure or minimum or maximum temperature and/or viscosity. Certain models have restrictions in pressures and/or viscosities. See specifications, page 144.4, and performance curves.

②Nominal capacities based on handling thin liquids at 1800 RPM on three small sizes, 1200 RPM on three large sizes.

Copyright 1985

VIKING® HEAVY-DUTY PUMPS

SERIES 4195

STANDARD CONSTRUCTION

UNMOUNTED PUMPS

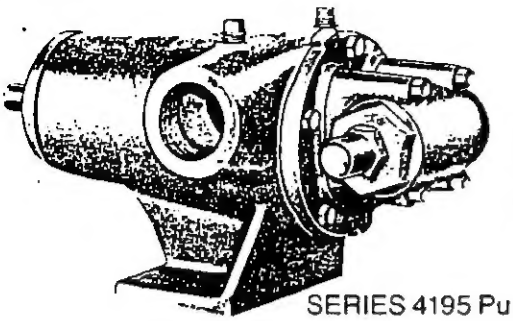

SERIES 4195 Pumps
"GG", "HJ" and "HL" Sizes

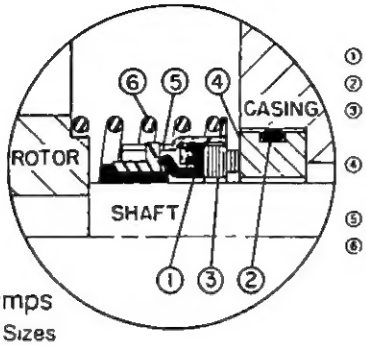

MECHANICAL SEAL

① Buna-N bellows
② Buna-N O-ring.
③ Carbon rotating face (washer)
④ Ni-Resist stationary seat.
⑤ Steel metal parts.
⑥ Stainless steel spring.

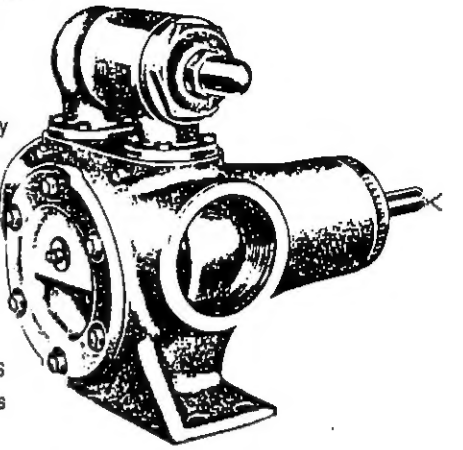

SERIES 4195 Pumps
"AS", "AK" and "AL" Sizes

In addition to the famous features listed on the previous page, Series 4195 heavy-duty pumps are furnished with an integral relief valve as shown in the pump photos above. Return-to-tank valves are also available on all models on request. Note: On the "GG", "HJ" and "HL" sizes, the valve mounts on the pump head. The "AS", "AK" and "AL" size value mounts on top of the pump casing. All sizes equipped with Buna-N mechanical seal with carbon rotating and Ni-Resist stationary faces.

For Optional Seal Construction—See Section 630.
Dimensions for Unmounted Pumps—See Page 144.8.
Performance Data for Unmounted Pumps—See Pages 144.13 through 144.26.

CONSTRUCTION—SERIES ①4195 ("GG" THROUGH "AL" SIZES)

Standard Construction Models	Casing	Head	Rotor	Idler	Rotor Shaft and Idler Pin	Idler Bushing	Internal Safety Relief Valve
GG4195 HJ4195	Iron	Iron	②Iron	③Iron	Steel	Carbon Graphite	Iron
HL4195	Iron	Iron	Ductile Iron	Iron	Steel	Carbon Graphite	Iron
AS4195 AK4195 AL4195	Iron	Iron	Ductile Iron	Ductile Iron	Steel	Carbon Graphite	Iron

SPECIFICATIONS—UNMOUNTED PUMPS

Model Numbers	Port Size	④ Nominal Pump Rating		Motor Horsepower Required At Rated Speed Pumping 100 SSU Liquid		Maximum Hydrostatic Pressure	⑦ Maximum Pump Discharge Pressure	① Maximum Temperature	⑤ Steel Fitted Construction Recommended Above This Viscosity	Approximate Shipping Weight With Valve (Less Power)
Unmounted Pump	Inches	GPM	RPM	50 PSI	100 PSI	PSIG	PSIG	Degrees F	SSU	Pounds
GG4195	1	10 7	1800 1200	¾ ½	1 ¾	400	100—below 38 SSU 150—38 to 100 SSU 250—above 100 SSU	225	7500	20
HJ4195	1½	20 13	1800 1200	1½ 1	2 1½	400	100—below 38 SSU 150—38 to 100 SSU 250—above 100 SSU	225	7500	44
HL4195	1½	30 20	1800 1200	2 1½	3 2	400	100—below 38 SSU 150—38 to 100 SSU 250—above 100 SSU	225	⑥	44
AS4195	2½	35	1200	2	3	400	100—below 38 SSU 150—38 to 100 SSU 250—above 100 SSU	225	⑥	85
AK4195	2½	50	1200	3	5	400	100—below 38 SSU 150—38 to 100 SSU 250—above 100 SSU	225	⑥	85
AL4195	3	75	1200	5	7½	400	100—below 38 SSU 150—38 to 100 SSU 250—above 100 SSU	225	⑥	86

① Standard Buna-N seal from—20°F. to +225°F. With special construction, temperatures from −40°F. to +350°F. can be handled with this series.

② When steel fitted construction is required, "GG" will have steel rotor, "HJ" will have ductile iron rotor.

③ "GG" size has steel idler.

④ Nominal capacities based on handling thin liquids at 1800 RPM on three small sizes, 1200 RPM on three large sizes

⑤ For viscosities above 15,000 SSU, provide details for recommendations.

⑥ These models have ductile iron rotors, steel fitted rotors not necessary.

⑦ If suction pressure exceeds 100 PSIG, consult factory

VIKING® HEAVY-DUTY PUMPS
SERIES 4195
STANDARD CONSTRUCTION

DIMENSIONS
These dimensions are average and not for construction purposes. Certified prints on request.

For specifications, see page 144.4

DIMENSIONS—
SERIES 4195
UNMOUNTED PUMPS
"GG"—"HJ"—"HL" SIZES

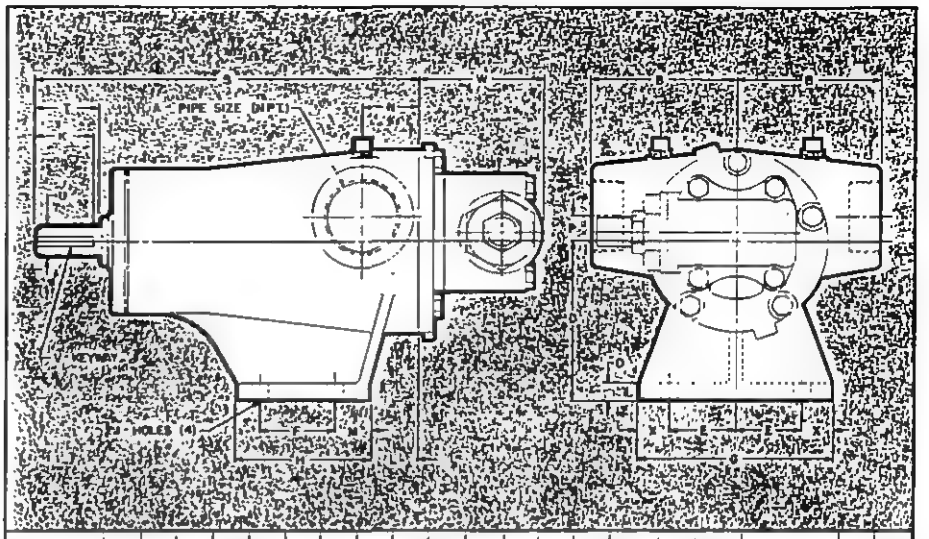

MODEL NO	A	B	D	E	F	G	H	J	K	L	M	N	O	P	S	T	U	V	W	X
GG4195	1	2.75	2.75	1.62	1.31	4.00	2.44	.34	.94	.03	.66	1.12	.31	.62	7.31	1.12	.500	FLAT	2.66	.38
		70	70	41	33	102	62	9	24	1	17	29	8	16	186	29	12.70		67	10
HJ4195	1½	3.75	4.12	1.75	2.00	5.00	3.50	.41	1.50	1.25	.88	1.50	.44	.62	10.00	1.62	1.750	19 x 09	3.28	.75
		95	105	44	51	127	89	10	38	32	22	38	11	16	254	41	19.05	4.76 X 2.38	83	19
HL4195	1½	3.75	4.12	1.75	2.00	5.00	3.50	41	1.50	1.25	.88	1.50	.44	.62	10.00	1.62	1.750	19 x 09	3.28	1.75
		95	105	44	51	127	89	10	38	32	22	38	11	16	254	41	19.05	4.76 X 2.38	83	19

NOTE: Dimensions shown in grey area are millimeters, others are inches

For specifications, see page 144.4.

DIMENSIONS—
SERIES 4195
UNMOUNTED PUMPS
"AS"—"AK"—"AL" SIZES

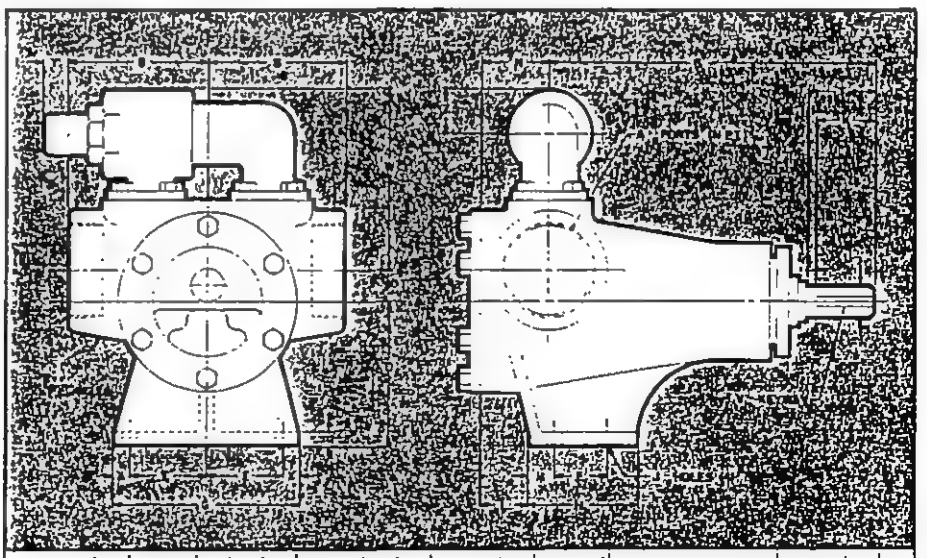

MODEL NO	A	B	D	E	F	G	H	J	K	L	M	N	O	P	S	T	U	V	W	X	Y	Z
AS4195	2½	5.00	5.25	2.88	2.00	6.75	4.00	.41	2.25	1.25	1.00	2.00	.44	1.12	1.12	1.12	2.38	1.000	25 x	12.700	.50	1.00	1.56
		127	133	73	51	171	102	10	57	32	25	51	11	29	308	60	25.40	6.35 x 3.18	178	13	25	40
AK4195	2½	5.00	5.25	2.88	2.00	6.75	4.00	.41	2.25	1.25	1.00	2.00	.44	1.12	1.12	1.12	2.38	1.000	25 x	12.700	.50	1.00	1.56
		127	133	73	51	171	102	10	57	32	25	51	11	29	308	60	25.40	6.35 x 3.18	178	13	25	40
AL4195	3	5.00	5.25	2.88	2.00	6.75	4.00	.41	2.25	1.75	1.00	2.50	.44	1.12	1.12	1.12	2.38	1.000	25 x	12.700	.50	1.00	1.56
		127	133	73	51	171	102	10	57	44	25	64	11	29	308	60	25.40	6.35 x 3.18	178	13	25	40

NOTE Dimensions shown in grey area are millimeters, others are inches

PERFORMANCE DATA

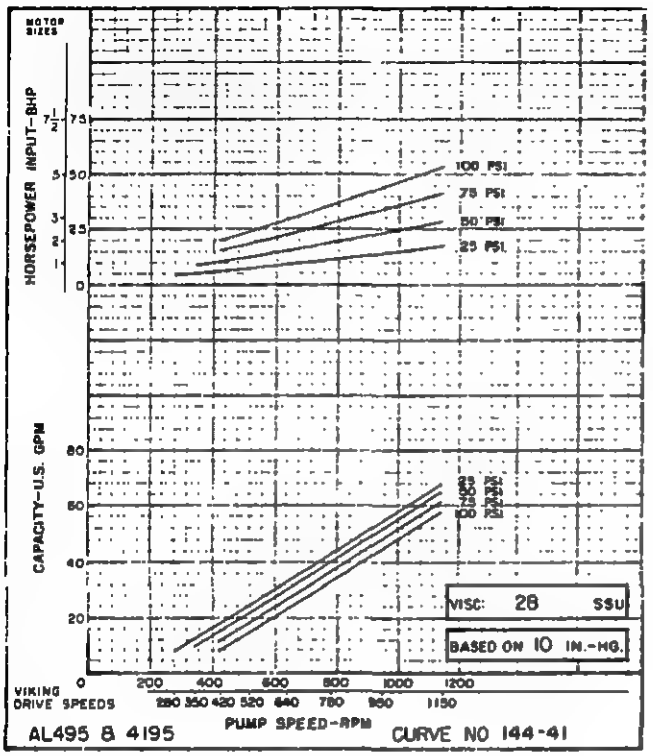

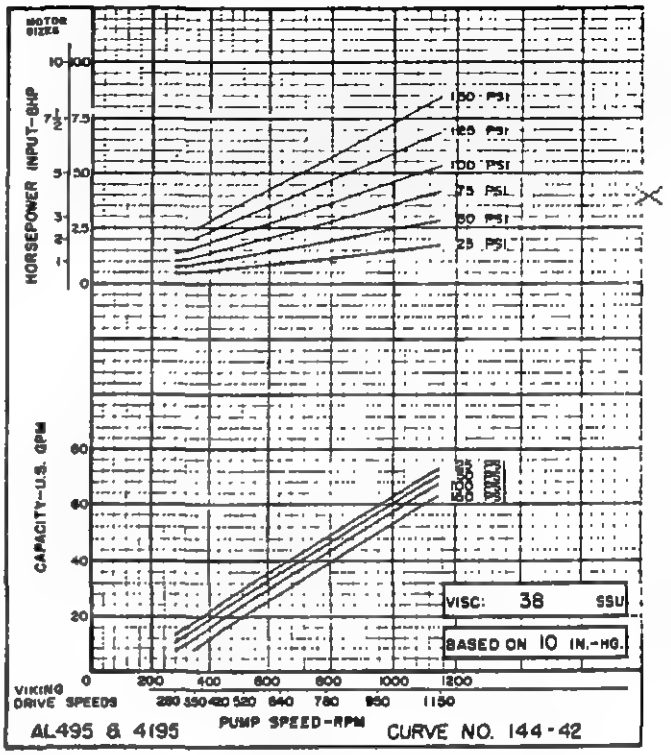

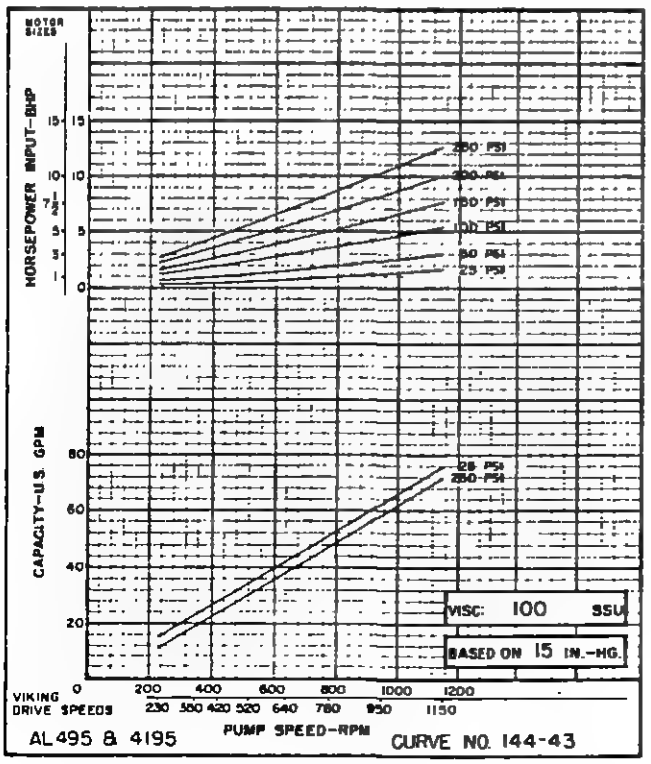

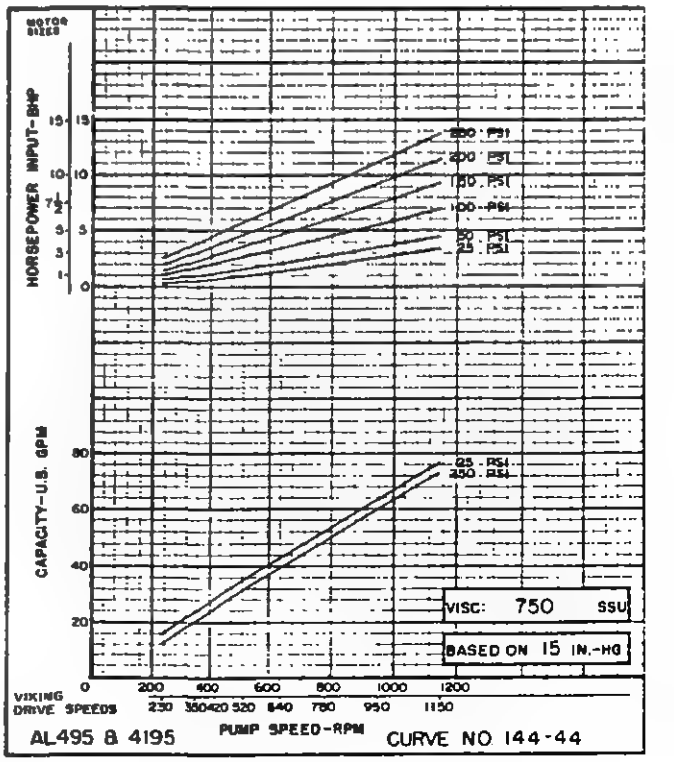

PREFERRED LIGHT OIL PUMP SETS

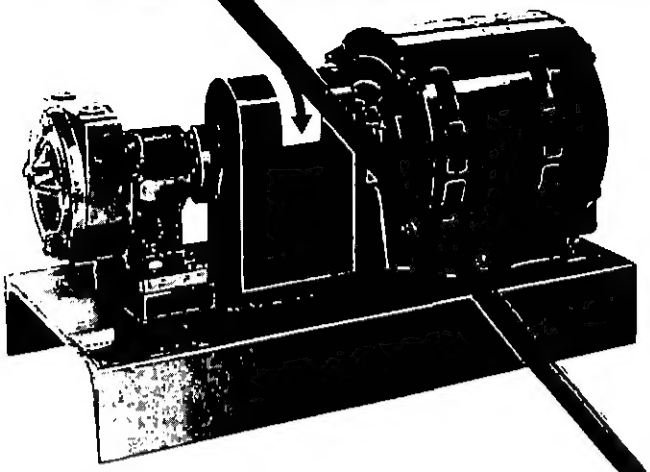

Preferred Light Oil Pump Sets provide a wide selection of pumps for commercial and industrial applications involving boilers, diesel generators, gas turbines and similar installations utilizing lighter grades of fuel oil.

All models are positive displacement, gear type pumps with cast iron bodies. Each is mounted on a heavy, one-piece structural steel channel beam base, carefully aligned and direct connected through a flexible coupling to a standard N.E.M.A. frame motor. A rigid close fitting guard of heavy gauge steel is installed to meet OSHA standards but is easily removed for servicing of components.

In addition to the standard sizes listed in the table, pump sets with alternate capacities, for different discharge pressures and for other electrical characteristics are available on special order. Preferred Nitralloy Pump Sets are available for applications using the heavier grades of fuel oil.

CAST IRON PUMPS FOR VISCOSITIES OF 35 TO 200 SSU

NUMBER	CAPACITY G.P.H.	PRESSURE P.S.I.	SPEED R.P.M.	MOTOR H.P.	MOTOR Voltage	MOTOR Phase
LO-101	25	100	1725		115-230	1
LO-102	45	100	1725	¼	115-230	1
LO-103	90	100	1725	¼	115-230	1
LO-104	160	100	1725	½	115/230	1
LO-105	340	100	1725	½	220/440	3
LO-106	320	100	1725	¾	220/440	3
LO-201	150	50	1140	½	220/440	3
LO-202	300	100	1140	¾	220/440	3
LO-203	800	50	1140	¾	220/440	3
LO-204	700	100	1140	1½	220/440	3
LO-205	1100	50	1140	1½	220/440	3
LO-206	1000	100	1140	2	220/440	3
LO-207	1900	50	1140	2	220/440	3
LO-208	1800	100	1140	5	220/440	3

Ratings are nominal at pressure shown with maximum 10" Hg. vacuum at inlet.

SUGGESTED SPECIFICATION

Oil Pump Sets shall be factory assembled on a structural steel channel beam base and include pump, motor, flexible coupling and guard to meet OSHA standards. Pump set shall be suitable for No. 2 fuel oil and/or diesel oil and shall be Preferred Utilities Manufacturing Corp., Model——, or equal, as approved, rated at——g.p.h. against a discharge of——p.s.i.

PREFERRED GAUGES

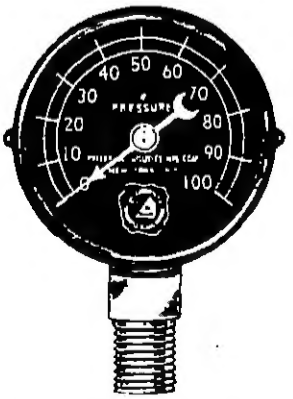

Pressure Gauges

0 - 50 pounds
0 - 100 pounds
0 - 300 pounds
0 - 160 pounds
0 - 300 pounds

Preferred gauges are of the standard Bourdon tube type which is almost universally used for oil burner installations.

The 2" diameter dials are black with easy-to-read white markings and pointer. The case has a satin black finish with a chrome bezel, the movement is solid brass with a copper Bourdon tube.

All gauges are stocked with ¼" i.p.s. bottom connections. The 0-300 p.s.i. pressure gauge is also available with ¼" i.p.s. back connection.

When ordering, specify range and, for 0-300 p.s.i. whether bottom or back connection.

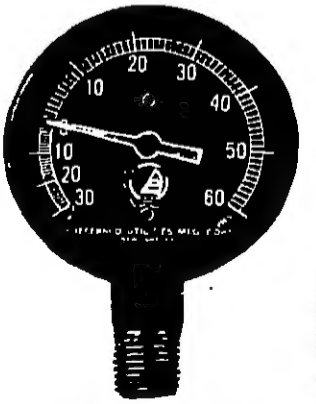

Vacuum Gauges
0 - 30 inches

Compound Gauges
30" - 0 - 60 pounds

Bulletin 19.21

Bulletin 19.21

PREFERRED UTILITIES MANUFACTURING CORPORATION
11 South Street, P.O. Box 1280, Danbury, Conn. 06810-1280
(203) 743-6741

PREFERRED DUPLEX OIL STRAINER

No. 50

Preferred No. 50 Duplex Oil Strainers are ideal for duplex fuel handling systems and for those applications where the requirement for a continuous supply of oil does not permit interruption of the flow for routine cleaning of strainer baskets.

In the No. 50 strainer, oil flows through only one basket at a time. the inactive basket is completely sealed off and may be readily removed. Switching from one basket to the other is accomplished by moving the handle through a 90 degree arc, there is no obstruction to flow even when the handle is in the intermediate position. At the end of its travel the handle blocks inadvertent opening of the active side.

Covers are gasketed to assure an air-tight seal and are secured with a quick-opening clamp which quickly swings out of position.

These strainers are suitable for use on the suction side of the oil pumps or for discharge pressures to 200 p.s.i. They are available either threaded or flanged in the sizes shown in the table. All sizes have one-piece cast iron bodies. ASTM A-48-58 Class 30 and are hydrostatically tested at 300 p.s.i. The 4" and 6" sizes have a special lifting jack to facilitate switching from one side to the other. A few turns of this handwheel lift the plug off the seat, after the handle has been rotated the wheel is turned back to lock the assembly in position.

Standard baskets have $\frac{3}{64}$" perforations. suitable for both distillate and low-sulfur residual fuel oil. A wide selection of special baskets is available at extra cost.

When ordering, specify pipe size and either screwed or flanged connection.

SUGGESTED SPECIFICATION

Furnish and install where shown one ____" flanged (screwed) duplex fuel oil strainer. Strainer shall have one-piece cast iron body, ASTM A-48-58 Class 30 hydrostatically tested at 300 p.s.i. and shall be suitable for pressure to 200 p.s.i. Strainer shall be Preferred Utilities Manufacturing Corp. No. 50 or equal, as approved, with $\frac{3}{64}$" perforated brass baskets.

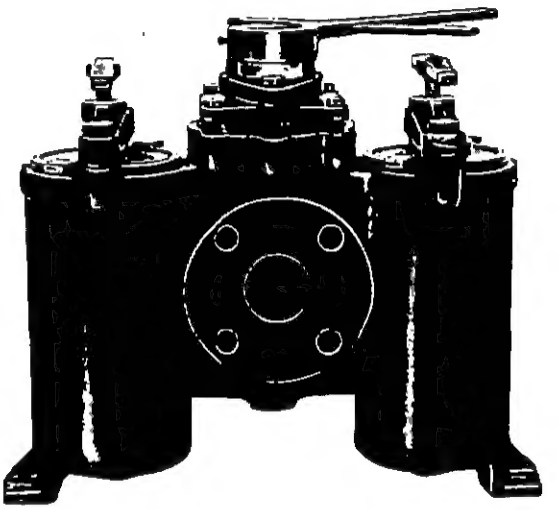

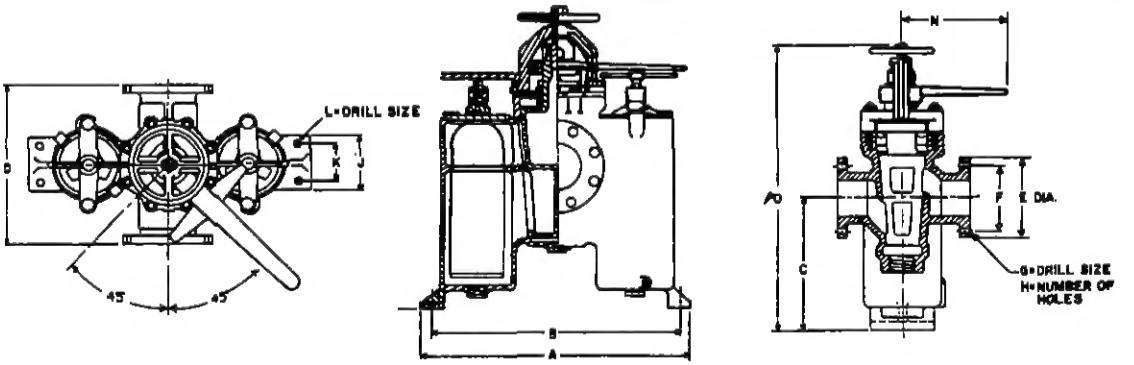

	Pipe Size	A	B	C	D	E	F	G	H	J	K	L	N	O
SCREWED	¾, 1	11	10⅛	5	5⅜	—	—	—	—	2¼	1⅞	—	8	10 15/16
	1¼, 1½	14 13/16	13 15/16	7	7 5/16	—	—	—	—	2¾	1 5/16	—	10⅞	13⅛
	2	18¾	17⅜	8 5/16	9⅜	—	—	—	—	3⅛	1 13/16	—	13½	16 5/16
	2½	18¾	17⅜	8 5/16	9⅜	—	—	—	—	3⅛	1 13/16	—	13½	16 5/16
FLANGED	2	18⅝	17⅜	8 5/16	10⅜	6	4¾	¾	4	3⅛	1 13/16	5/16	13½	16⅛
	2½	18⅝	17⅜	8 5/16	10¾	7	5½	¾	4	3⅛	1 13/16	5/16	13½	16⅛
	3	21¾	20½	8 13/16	13½	7½	6	¾	9	4	2½	5/16	17⅛	17 5/16
	4	22¾	21½	13¼	16	9	7½	¾	8	4½	3	5/16	19	27 3/32
	5	25½	17 3/16	14⅜	18⅜	10	8½	⅞	8	11⅛	9¾	9/16	19¾	32¾
	6	31¼	21½	15⅛	22	11	9½	⅞	8	12⅜	11¼	⅝	19¾	34½

PREFERRED UTILITIES MANUFACTURING CORPORATION

11 South Street, P.O. Box 1280, Danbury, Conn. 06810-1280
(203) 743-6741

BACK PRESSURE REGULATING VALVE

Type BQ

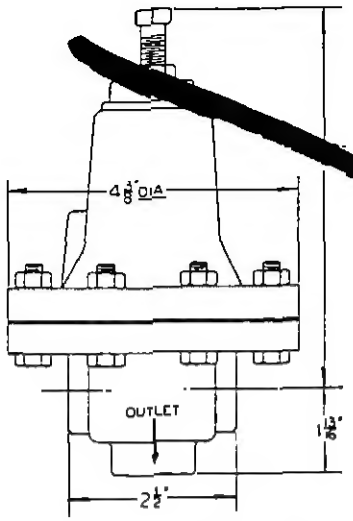

The Type BQ Back Pressure Regulating Valve automatically maintains a constant valve inlet pressure regardless of pressure variations in the upstream or downstream piping. It is widely used with oil burners to maintain desired pressure on the inlet side of the fuel metering valve. The pressure to be controlled exerts its force on the underside of the diaphragm, compressing the control spring thus causing the piston to lift off its seat and pass excess fluid as required to maintain the set pressure. The maintained pressure is adjustable within the spring range by means of the external adjusting screw.

This valve is of i.p.s., iron body, bronze trim, composition disc and neoprene diaphragm

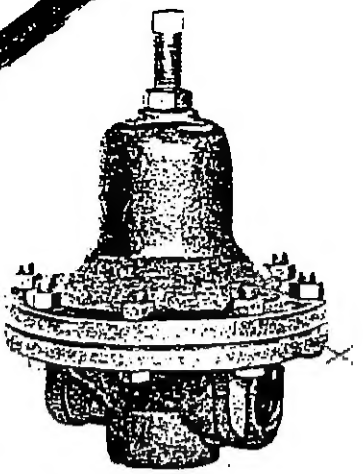

temperatures to 200° F. with spring ranges of 26-75 p.s.i. or 76-150 p.s.i. available from stock. It has capacity of 390 g.p.h. of No. 2 or No. 4 fuel oil and 275 g.p.h. of No. 6 fuel oil at a viscosity of 3500 SSU. Our Type V Back Pressure Regulating Valve is recommended for higher flow rates.

On special order we can furnish this valve with spring ranges of 5-15 p.s.i.g., 16-25 p.s.i. or 151-300 p.s.i.

When ordering specify spring range and any special construction required.

SUGGESTED SPECIFICATION

Pressure in the oil supply line shall be controlled by a diaphragm type Back Pressure Regulating Valve, 1/2" Type BQ as furnished by Preferred Utilities Mfg. Corp. or equal as approved. Valve shall have cast iron body for pressures to 300 p.s.i., bronze trim and neoprene diaphragm with adjustable range of _____ to _____ p.s.i.

RELIEF VALVE

Type R

The Type R Relief Valve is designed to relieve excess pressure in lines containing any grade of fuel oil. It is also suitable for use with water and air. It opens to relieve at the set pressure and closes tightly when the pressure drops. It should be used as a safety device to relieve excess pressure and not as a regulating valve to maintain a constant upstream pressure.

When ordering specify size and range.

CONSTRUCTION

Body: heavy bronze, screwed ends, for 300 psig at 300 F max. Main Valve: stainless steel ball through 1½", bronze disc 2"–3". Loading Springs: cadmium plated steel. Bronze spring housing. Regulating screw protection cap. SPRING RANGES—5-25, 25-100, 75-300 psi

SUGGESTED SPECIFICATION

All expansion and pressure relief valves shall be sized and located as shown on drawings. Valves bodies shall be one-piece bronze construction suitable for pressures to 300 p.s.i. Valves shall be Type R as supplied by Preferred Utilities Mfg. Corp. with adjustable range of_____ to_____p.s.i. or equal as approved.

RATED CAPACITY—GPM	inlet psig	½"	¾"	1"	1¼"	1½"	2"	2½"	3"
Flow based on water at 5 psi outlet pressure. Oil flow correction factors: 50 SSU, flow × 0.86, 200 SSU, flow × 0.71, 2000 SSU, flow × 0.51	50	10	13	17	23	30	50	67	94
	70	12	16	20	28	36	60	80	112
	115	15	21	26	37	47	79	105	147

Bulletin 19.25

PREFERRED UTILITIES MANUFACTURING CORPORATION
11 South Street, P.O. Box 1280, Danbury, Conn. 06810-1280
(203) 743-6741

MODEL V4-2-U FLOTECT® Vane Operated Flow Switch

Explosion-Proof; U.L. and C.S.A. listed – Class I, Groups C, D; Class II, Groups E, F, G.

Dependable protection against flow variation or stopping in pipelines for fluids, gases and flowing solids.

Supplied with Multi-Layer Vane for field installation in pipes from 1½" to 8" diameter.

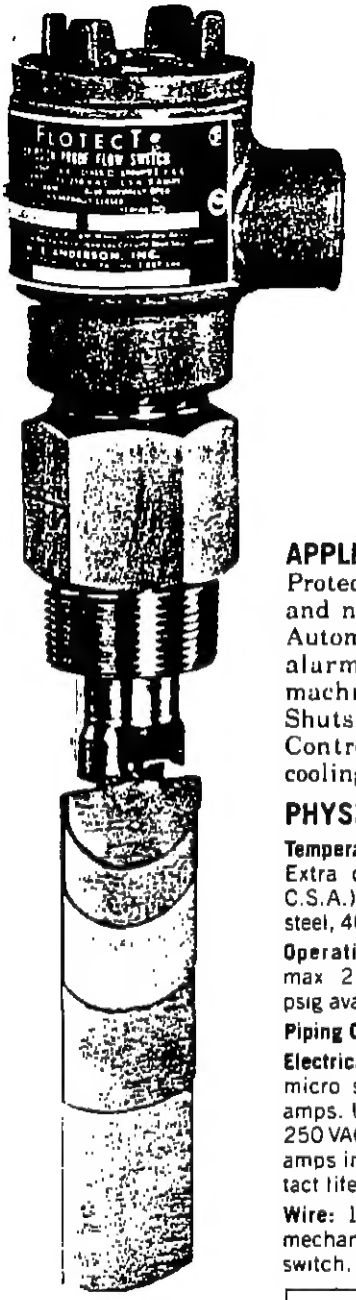

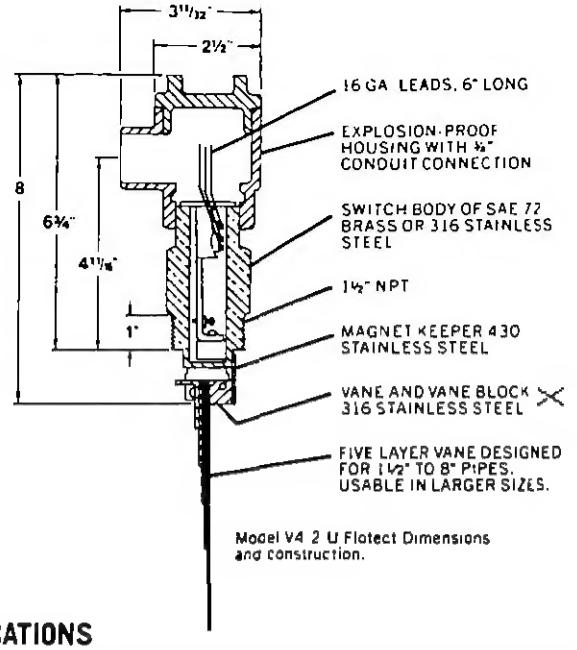

Model V4 2 U Flotect Dimensions and construction.

Compact and reliable, the Flotect™ V4 Flow Switch operates automatically to protect equipment and pipeline systems against damage from reduction or loss of flow. Installed in thousands of pipelines and processing plants around the world, this unique magnetically actuated switching design gives superior performance. Removing appropriate layers of the five-layer vane allows installation in pipes from 1½" to 8" in diameter. There are no bellows, springs, or seals to fail. Instead, the free-swinging vane attracts a magnet within the sealed switch body above, actuating a micro switch by means of a simple lever arm.

Features include: Simplicity of design and a leak-proof switch body. Machined from bar stock (for pressures to 2000 psig), it eliminates the possibility of pipeline product entering the switch compartment. The threaded conduit enclosure cover permits easy inspection or replacement of electrical assembly without shutting down the pipeline or removing electrical conduit. The unit fits directly into pipeline with tee, thredolet, flange or coupling for easy installation. Pendulum-like vane action responds accurately to product flow rate. The multi-layer vane is sensitive to low velocity flows, yet it is rugged enough to withstand high flow surges. If desired, a delay timer can be wired into the installation. The explosion-proof unit is U.L. and C.S.A. listed for Class I, Groups C and D, Class II, Groups E, F and G.

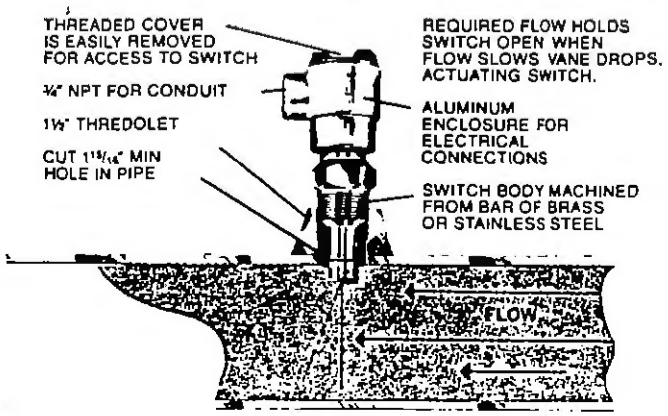

Thredolet Installation. May also be installed using tee, flange or coupling.

APPLICATIONS

Protects motors, pumps and other equipment against low flow and no flow. Controls sequential operation of pumps, etc. Automatically starts auxiliary pumps and engines or actuates alarm and signal systems. Stops water cooled engines, machines and processes when coolant flow is interrupted. Shuts down burner when air flow through heating coil fails. Controls dampers according to flow. Stops machine tools if cooling oil flow ceases.

PHYSICAL DATA

Temperature limits: Standard 275°F. Extra cost option (not U.L. or C.S.A.), V-4-SS-MT, 316 stainless steel, 400°F. max.

Operating pressure: 2000 psig. max 2500 psig Rating to 5000 psig available.

Piping Connection: 1½" NPT.

Electrical rating: SPDT snap action micro switch; contact rating 10 amps. U.L., 5 amps C.S.A., 125/250 VAC, 60 Hz; 5 amps resistive, 3 amps inductive, 30 volts DC. Contact life, 1,000,000 cycles.

Wire: 16 gauge copper, 6" long, mechanically and solder bonded to switch.

Switch body: One piece milled, bored brass; 316 stainless steel extra cost option.

Vane: Stainless steel, 1 9/16" wide.

Installation: Within 5° vertical for proper operation. Index arrow must point in direction of flow.

Weight: 4 lbs., 4 oz.

Options: Time delay relay adjustable from 1 to 180 seconds. Cartridge heater to melt paraffin, etc. DPDT snap switches.

ACTUATION/DEACTUATION FLOW RATES
Upper figures are SCFM air, lower shaded figures are GPM cold water

Vane Layers	1½" Pipe	2" Pipe	3" Pipe	4" Pipe	6" Pipe	8" Pipe
1	50-17 12-4	95-31 19-8	185-53 54-22	354-130 120-50	936-353	1225-534
1,2		32-14 8-3	88-44 29-13	176-102 68-32	556-291 165-80	786-533 270-160
1,2,3			44-21 14-7	126-71 36-19	327-211 100-60	550-392 170-120
1,2,3,4				63-40 22-12	229-172 63-46	471-330 125-103
1,2,3,4,5					141-106 40-26	315-236 91-69

Custom vanes available for set-points ranging from 6 to 7 ft/sec. liquid or 1000 to 6000 ft/min. air

Suggested Specification

Automatic explosion-proof flow switches shall be vane operated to actuate a single pole double throw snap switch. Motion of the vane shall actuate switch by action of a magnet linked to the switch inside the single-piece sealed switch body. Switches shall be W. E. Anderson Catalog No. V4 _____ with specified materials and vane area.